HC3UGBHC

CATEGORY	GENERAL COUNTERS & BACK BARS
RANGE	**CAMEO**
UNIT	REFRIGERATOR
TYPE	SELF CONTAINED
DOORS	3

2yr WARRANTY



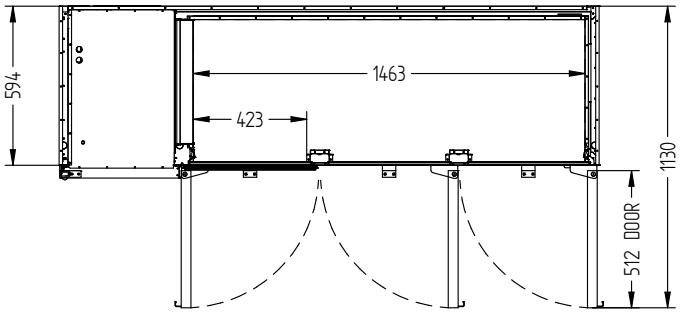

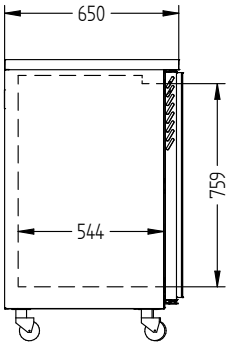

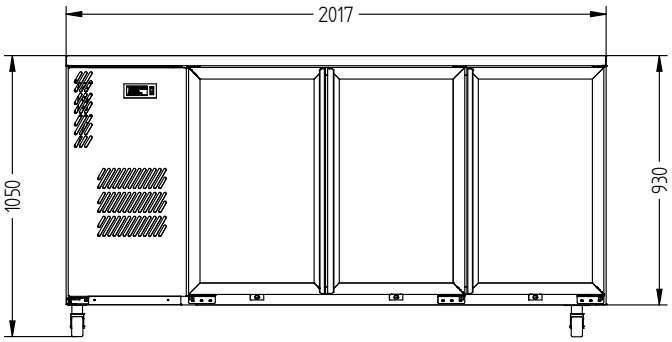

SPECIFICATIONS

CAPACITY LITRES	640
TEMPERATURE	1°C / 4°C
FRONT BREATHING	YES
DIMENSIONS - W X D X H (ON 120 MM H CASTORS) MM	2017 W x 650 D x 1050 H
WEIGHT UNPACKED (KG)	200

STANDARD INCLUSIONS ***

DOOR TYPE	Standard: G (Glass Door)
FINISH (INTERIOR AND EXTERIOR EXCLUDING REAR AND UNDER)	B (Black with stainless steel countertop and internal foor)
SHELVES/DOOR (ADJUSTABLE STRIPS AND CLIPS)	2

GAS TYPE

REFRIGERANT	R290

ELECTRICAL

POWER SUPPLY	10 amp
POWER CABLE LENGTH (METRES)	2
RUNNING AMPS	1.8

PERFORMANCE

KWH/24H	3.22
TEMPERATURE CLASS	M1
CLIMATE CLASS	3
AMBIENT RATING	40°C

*** For **OPTIONS** refer to the current Williams Price Guide