HP2SWHC

CATEGORY	GENERAL UPRIGHTS
RANGE	**Pearl**
UNIT	REFRIGERATOR
TYPE	SELF CONTAINED
DOORS	2

2yr WARRANTY



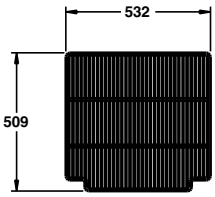

SHELF DETAIL

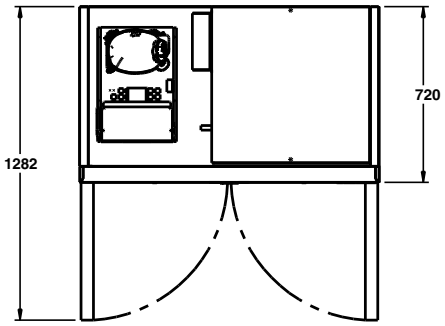

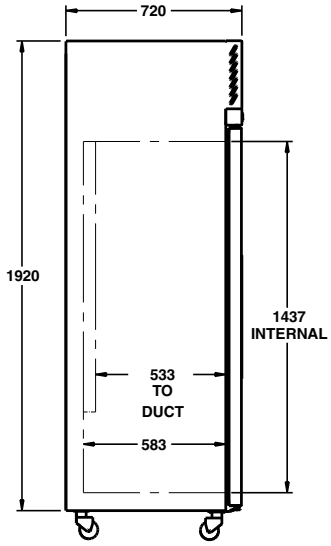

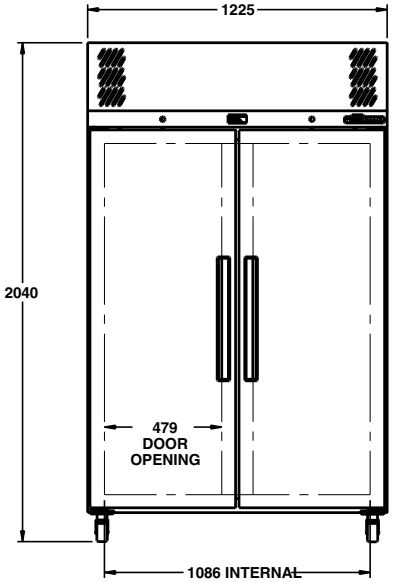

SPECFICATIONS

CAPACITY LITRES	950
TEMPERATURE	1°C / 4°C
DIMENSIONS - W X D X H (ON 120 MM H CASTORS) MM	1225 W x 720 D x 2040 H
WEIGHT UNPACKED (KG)	220

STANDARD INCLUSIONS ***

DOOR TYPE	S (Solid Door), Optional: PT (Pass Through)
FINISH (INTERIOR AND EXTERIOR EXCLUDING REAR AND UNDER)	W (White)
SHELVES/DOOR (ADJUSTABLE STRIPS AND CLIPS)	4

GAS TYPE

REFRIGERANT	R290

ELECTRICAL

POWER SUPPLY	10 amp
POWER CABLE LENGTH (METRES)	2
RUNNING AMPS	ÊDE

PERFORMANCE

KWH/24HR READING	ÊDÐE
TEST STANDARD	EN 16825 (Professional)
TEST CONDITIONS	4 M1
AMBIENT RATING	ËÐvŁ

REFRIGERATION WATTAGES FOR OPTIONAL REMOTE UNITS

FRIDGE MODELS - SOLID DOORS (R448a)	580 @ -5°C SST

*** For **OPTIONS** refer to the current Williams Price Guide