LG2SSHC

CATEGORY	GENERAL UPRIGHTS
RANGE	**Garnet**
UNIT	FREEZER
TYPE	SELF CONTAINED
DOORS	2

2yr WARRANTY

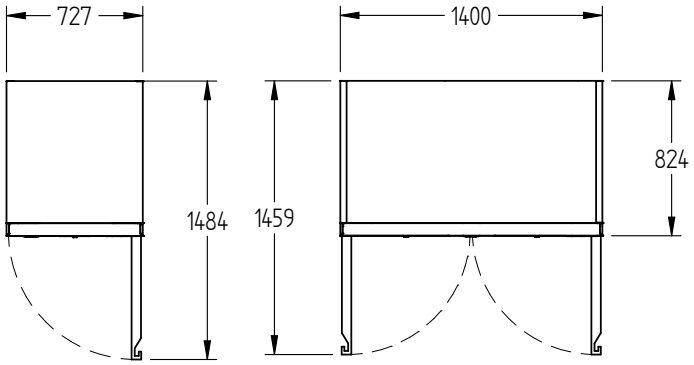



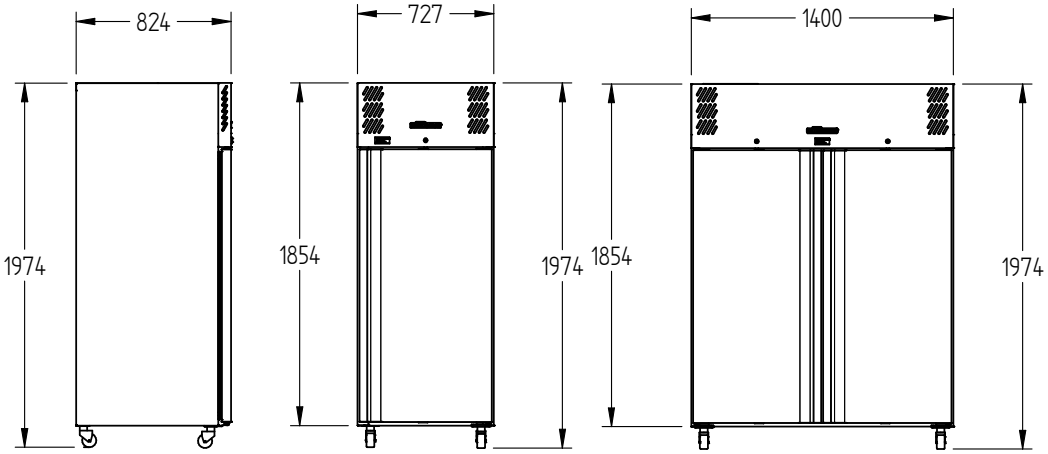

SPECFICATIONS	
CAPACITY LITRES	1270
TEMPERATURE	-18°C / -22°C
DIMENSIONS - W X D X H (ON 120 MM H CASTORS) MM	1400 W x 824 D x 1974 H
WEIGHT UNPACKED (KG)	220
STANDARD INCLUSIONS ***	
DOOR TYPE	S (Solid Door)
FINISH (INTERIOR AND EXTERIOR EXCLUDING REAR AND UNDER)	S (Stainless Steel)
SHELVES/DOOR (ADJUSTABLE STRIPS AND CLIPS)	4
GAS TYPE	
REFRIGERANT	R290

ELECTRICAL	
POWER SUPPLY	10 amp
POWER CABLE LENGTH (METRES)	2
RUNNING AMPS	3.6
PERFORMANCE	
KWH/24HR READING	10.6
TEST STANDARD	EN 16825 (Professional)
TEST CONDITIONS	4 L1
AMBIENT RATING	40°C
REFRIGERATION WATTAGES FOR OPTIONAL REMOTE UNITS	
FREEZER MODELS - SOLID DOORS (R448a)	900 @ -30°C SST

*** For **OPTIONS** refer to the current Williams Price Guide