HE3RSSBA

CATEGORY	FOODSERVICE UPRIGHTS
RANGE	**Emerald**
UNIT	REFRIGERATOR
TYPE	REMOTE
DOORS	3



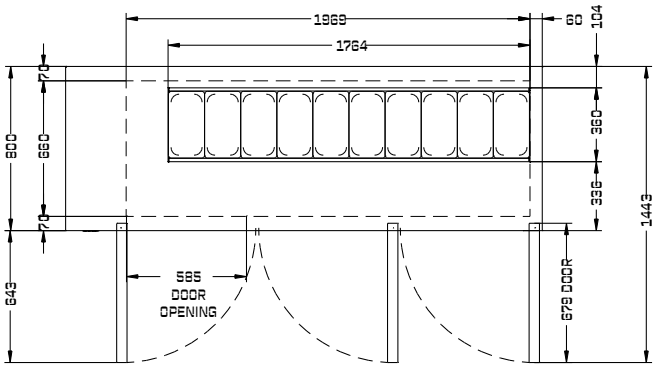

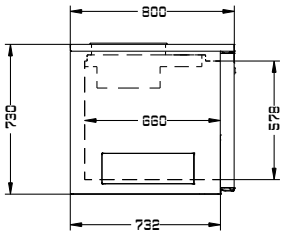

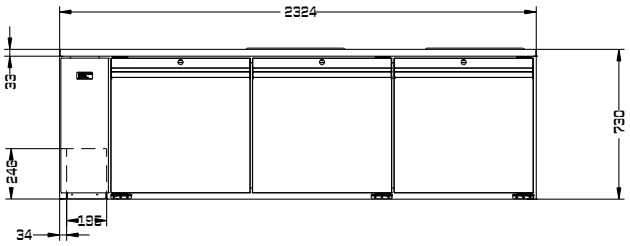

SPECIFICATIONS

CAPACITY LITRES	900
TEMPERATURE	1°C / 4°C
DIMENSIONS - W X D X H (ON 150 MM H LEGS)	2324 W x 800 D x 880 H
WEIGHT UNPACKED (KG)	200

STANDARD INCLUSIONS ***

DOOR TYPE	Standard: SD (Solid Door) Optional: DR (Drawer)
FINISH (INTERIOR AND EXTERIOR EXCLUDING REAR AND UNDER)	SS (Stainless Steel)
SHELVES/DOOR	1
BLOWN AIRWELL (100MM DEEP 1/3 PANS INCLUDED)	10 X 1/3 PANS

ELECTRICAL

POWER SUPPLY		10 amp
FRIDGE MODELS	**RUNNING AMPS**	0.6

GAS TYPE

REFRIGERANT	**FRIDGE MODELS**	R448a

REFRIGERATION WATTAGES FOR REMOTE UNITS

FRIDGE MODELS - SOLID DOOR BA	980 @ -10°C SST

*** For **OPTIONS** refer to the current Williams Price Guide