HB2RG

CATEGORY	GENERAL COUNTERS & BACK BARS
RANGE	**Boronia**
UNIT	REFRIGERATOR
TYPE	REMOTE
DOORS	2



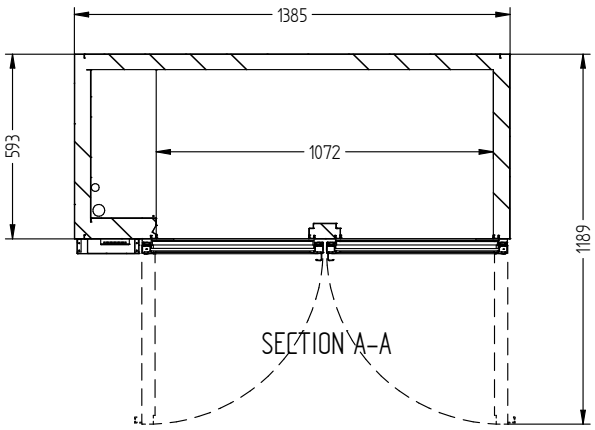

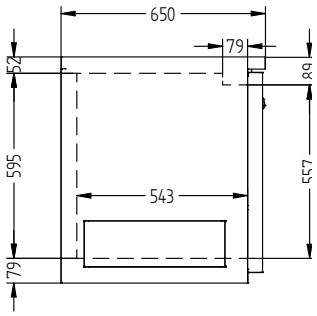

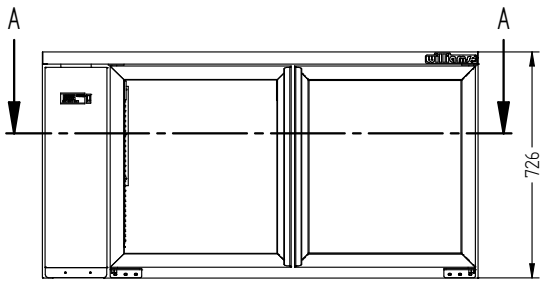

SPECIFICATIONS

CAPACITY LITRES	360
TEMPERATURE	1°C / 4°C
DIMENSIONS - W X D X H (ON 150MM H LEGS) MM	1385 W x 650 D x 875 H
WEIGHT UNPACKED (KG)	130

STANDARD INCLUSIONS ***

DOOR TYPE	Standard: G (Glass Door)
FINISH	B (Black with stainless steel countertop and internal floor) or S (Stainless Steel) interior and exterior excluding rear and under
SHELVES/DOOR	2

ELECTRICAL

POWER SUPPLY	10 amp
POWER CABLE LENGTH (METRES)	2
RUNNING AMPS	0.6

GAS TYPE

REFRIGERANT	R448a

REFRIGERATION WATTAGES FOR REMOTE UNITS

REMOTE WATTAGES	560 @ -5°C SST

*** For **OPTIONS** refer to the current Williams Price Guide