JL2R

CATEGORY	FOODSERVICE SPECIALISED
RANGE	**Jarrah**
UNIT	REFRIGERATOR
TYPE	REMOTE
DRAWERS	2



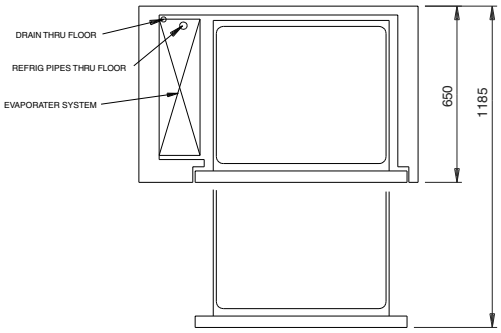

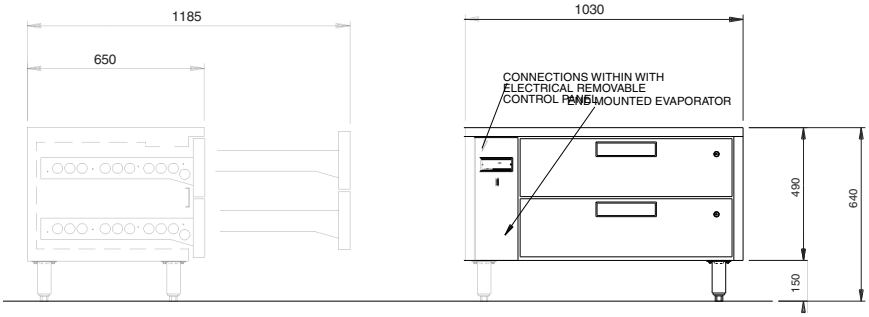

SPECIFICATIONS

CAPACITY 1/1 GN PAN (100 MM DEEP)	4
TEMPERATURE - 43°C AMBIENT ENVIRONMENT	1°C / 4°C
DIMENSIONS - W X D X H (ON 150MM H LEGS) MM	1030 W x 650 D x 640 H
WORKTOP LOAD LIMIT (KG)	170
WEIGHT UNPACKED (KG)	140

STANDARD INCLUSIONS ***

DRAWERS	2
FINISH (INTERIOR AND EXTERIOR EXCLUDING REAR AND UNDER)	SS (Stainless Steel)

ELECTRICAL

POWER SUPPLY	10 amp
POWER CABLE LENGTH (METRES)	2
RUNNING AMPS	0.5

GAS TYPE

REFRIGERANT	R448a
REFRIGERATION WATTAGES FOR REMOTE UNITS	
FRIDGE MODELS	400 @ -5°C SST

*** For **OPTIONS** refer to the current Williams Price Guide